Proprietary data, company confidential.
All rights reserved

Als Betriebsgeheimnis anvertraut
Alle Rechte vorbehalten

HIERARCHY	SHEET	PDF-SHEET
A5B00900172147-25942	index	sheet 1
	netlist1	sheet 2
	poslist1	sheet 3
	page1	----
	sheet1	sheet 4
	sheet2	sheet 5
	sheet3	sheet 6
	sheet4	sheet 7
	sheet5	sheet 8
	sheet6	sheet 9
	sheet7	sheet 10
	sheet8	sheet 11
	sheet9	sheet 12
	sheet10	sheet 13

				DATE	18.04.2005	Dorado B6E B2 Variant INT'L 64M_AMD leaded (V21) TOP HIERARCHY LEVEL SCHEMATIC	1:1
				USER	Chenh		
				APPR'D			
				COM MD PD HW4 BJ			
3	26105	18.04.2005	chenh	Siemens AG		145414	index
2	22022	24.03.2005	Chenh				
1	22022	18.03.2005	Chenh				
VERS.	CHANGE NUMBER	DATE	NAME	(Created by BOM number: A5B00900172151-26105)			

Proprietary data, company confidential.
All rights reserved

Als Betriebsgeheimnis anvertraut
Alle Rechte vorbehalten

1.5V
/sheet4 2 C
/sheet6 14 B

1.5V_DSP
/sheet4 3 C

1.5V_MAIN
/sheet4 3 C

3_SIN26M
/sheet3 2 D
/sheet3 4 D
/sheet1 13 C

A(0)
/sheet5 13 B

A(0:23)
/sheet5 10 C
/sheet5 15 E
/sheet5 2 C
/sheet5 7 F
/sheet4 13 F

A(23)
/sheet4 8 E

AC_CTS
/sheet4 9 C
/sheet7 13 E

AC_DCD
/sheet4 14 E
/sheet7 13 E

AC_RTS
/sheet4 9 C
/sheet7 13 E

ADV
/sheet4 10 F

AGND
/sheet4 3 G
/sheet4 4 F
/sheet4 5 G
/sheet4 5 F

AKKU_TYP
/sheet4 11 A
/sheet7 3 B

AUDIO_L
/sheet6 13 D
/sheet7 9 E

AUDIO_R
/sheet6 13 D
/sheet7 9 E

BATT+
/sheet3 13 E
/sheet3 11 E
/sheet4 9 A
/sheet6 5 B
/sheet6 1 F
/sheet6 7 A
/sheet6 7 D
/sheet8 10 B
/sheet1 1 E
/sheet1 7 E
/sheet9 14 E
/sheet9 9 A
/sheet9 1 A
/sheet7 4 B

BHE
/sheet5 15 E
/sheet5 13 B
/sheet4 10 F

BREF
/sheet4 1 E
/sheet4 15 A

BT_SIN26M
/sheet3 4 D
/sheet3 2 D
/sheet1 13 D

CCCLK
/sheet4 14 D
/sheet9 7 E

CCIN
/sheet4 13 D

CCIO
/sheet4 14 D
/sheet9 7 E

CCRST
/sheet4 14 D
/sheet9 7 E

CCVCC
/sheet6 14 B
/sheet9 7 E

CHARGE_UC
/sheet5 15 F
/sheet4 14 D
/sheet6 10 C

CS_FLASH_1
/sheet5 15 E
/sheet5 5 B
/sheet5 5 D
/sheet5 10 D
/sheet5 10 D
/sheet4 10 F

CS_SRAM
/sheet5 15 E
/sheet5 13 B
/sheet4 10 F

CTS_1
/sheet7 9 E

D(0:15)
/sheet5 15 B
/sheet5 5 C
/sheet5 13 C
/sheet5 10 F
/sheet4 12 C

DCD_1
/sheet7 9 E

EPN1
/sheet6 13 D
/sheet8 6 G

EPN1_FIL
/sheet4 8 A
/sheet4 6 D
/sheet6 4 D

EPP1
/sheet6 13 D
/sheet8 6 F

EPP1_FIL
/sheet4 8 A
/sheet4 6 E
/sheet6 4 D

F_WAIT
/sheet5 15 E
/sheet5 5 D
/sheet5 10 D

GND_MIC
/sheet4 1 B
/sheet4 4 B
/sheet4 6 C
/sheet4 4 G
/sheet4 6 A
/sheet4 4 B
/sheet8 4 C

/sheet7 9 E

GSM_PA_IN
/sheet1 1 F
/sheet1 9 F

HF_OUT
/sheet10 2 B
/sheet1 1 B

HF_OUT1
/sheet10 3 B

HW_CODING1
/sheet4 12 B
/sheet4 8 D

HW_CODING2
/sheet4 12 B
/sheet4 14 E

HW_CODING3
/sheet4 12 B
/sheet4 14 E

HW_CODING4
/sheet4 8 D
/sheet4 12 A

HW_CODING5
/sheet4 15 B
/sheet4 9 C
/sheet4 10 C

HW_CODING6
/sheet4 15 B
/sheet4 10 F
/sheet4 10 G

I2C_CLK
/sheet5 15 F
/sheet4 9 C
/sheet6 10 C

I2C_DAT
/sheet5 15 F
/sheet4 9 C
/sheet6 10 C

I2C_IRQ
/sheet5 15 F
/sheet4 11 D
/sheet6 10 C

I2S1_CLK0
/sheet4 13 E

I2S1_RX
/sheet4 13 E

I2S1_TX
/sheet4 13 E

I2S1_WA0
/sheet4 13 E

I2SCA0
/sheet4 14 E
/sheet4 15 E
/sheet6 7 E

I2SDA0
/sheet4 14 E
/sheet4 15 E
/sheet6 7 E

I2SWA0
/sheet4 14 E
/sheet4 15 E
/sheet6 7 E

KB0
/sheet4 8 E
/sheet8 14 E

KB2
/sheet4 8 E
/sheet8 14 F

KB3
/sheet4 8 E
/sheet8 14 F

KB4
/sheet4 8 E
/sheet8 14 E

KB5
/sheet4 8 E
/sheet8 14 F

KB6
/sheet4 8 E
/sheet8 14 E

KB7
/sheet4 7 E
/sheet6 7 C
/sheet8 14 D

KB8
/sheet4 8 E
/sheet8 14 D

KB9
/sheet4 8 E
/sheet8 14 D

KP_7
/sheet4 8 E

LCD_CLK
/sheet4 9 C
/sheet9 14 D

LCD_CS
/sheet3 10 D
/sheet3 13 D
/sheet4 10 C
/sheet9 14 D

LCD_DAT
/sheet3 10 D
/sheet3 13 D
/sheet4 9 C
/sheet9 14 E

LCD_LED1_A
/sheet3 13 D
/sheet3 10 D
/sheet9 5 A
/sheet9 14 E

LCD_LED2_A
/sheet3 13 D
/sheet3 10 D
/sheet9 5 A
/sheet9 14 E

LCD_RESET
/sheet3 10 D
/sheet3 13 D
/sheet4 10 C
/sheet9 14 D

LCD_RS
/sheet3 10 D
/sheet3 13 D
/sheet4 9 C
/sheet9 14 D

LIGHT_1
/sheet9 9 C
/sheet9 4 C

LIGHT_K
/sheet3 10 D
/sheet3 13 D
/sheet9 14 E
/sheet9 8 C

LIGHT_KB
/sheet4 14 E
/sheet4 15 E
/sheet9 2 D

LIGHT_LCD
/sheet4 11 C
/sheet9 5 D

LIGHT_OFF_N
/sheet4 8 D
/sheet9 3 A

MICN1
/sheet4 3 B
/sheet4 1 D
/sheet8 5 C

MICN2
/sheet4 4 A
/sheet4 1 D

MICP1
/sheet4 3 B
/sheet4 1 D
/sheet8 5 B

MICP2
/sheet4 4 A
/sheet4 1 D
/sheet7 9 E

MON1
/sheet5 15 F
/sheet4 9 F

MON2
/page1 3 A
/sheet4 9 F

OEN
/sheet4 10 F

PCN_PA_IN
/sheet1 1 F
/sheet1 9 F

PM_INT
/sheet4 10 C

POWER
/sheet6 2 C
/sheet7 9 E

RD
/sheet5 15 E
/sheet5 5 B
/sheet5 13 B
/sheet5 10 E
/sheet4 10 F

RESET_UC
/sheet5 10 E
/sheet5 5 B
/sheet4 12 C
/sheet6 11 C

RF_AFC
/sheet3 2 C
/sheet3 4 C
/sheet4 10 C
/sheet1 15 C

RF_ANT_DET
/sheet3 4 D
/sheet3 2 D
/sheet10 5 C
/sheet4 14 D

RF_BAND_SW
/sheet3 4 F
/sheet3 2 F
/sheet4 8 D
/sheet1 7 F

RF_CLK
/sheet3 2 A

/sheet3 4 A
/sheet4 14 F
/sheet1 15 E

RF_DAT
/sheet3 2 B
/sheet3 4 B
/sheet4 14 F
/sheet1 15 D

RF_FE_DTR_DCS
/sheet3 4 C
/sheet3 2 C
/sheet4 8 D
/sheet1 2 C

RF_FE_DTR_GSM
/sheet3 2 C
/sheet3 4 C
/sheet4 8 E
/sheet1 2 B

RF_I
/sheet3 4 B
/sheet3 2 B
/sheet4 1 E
/sheet1 9 F

RF_IX
/sheet3 4 B
/sheet3 2 B
/sheet4 1 E
/sheet1 10 F

RF_Q
/sheet3 4 B
/sheet3 2 B
/sheet4 1 E
/sheet1 10 F

RF_QX
/sheet3 2 B
/sheet3 4 B
/sheet4 1 E
/sheet1 10 F

RF_RAMP1
/sheet3 4 C
/sheet3 2 C
/sheet4 6 C
/sheet1 1 F

RF_SIN26M
/sheet3 4 D
/sheet3 2 D
/sheet4 11 C
/sheet1 14 D

RF_STR
/sheet3 4 A
/sheet3 2 A
/sheet4 14 E
/sheet1 15 D

RF_TXONPA
/sheet3 4 D
/sheet3 2 D
/sheet4 8 E
/sheet1 1 E

RINGIN
/sheet4 10 C
/sheet6 7 E

RTC_INT
/sheet4 12 C
/sheet6 7 C

RTS_1
/sheet7 9 E

RX
/sheet4 9 C
/sheet7 13 E

RX_1

/sheet7 9 E

SENSE
/sheet6 5 C
/sheet6 8 A

SLEEPQ
/sheet4 8 D
/sheet6 7 B

TBAT
/sheet4 11 A
/sheet4 1 E

TCK
/page1 4 C
/sheet4 9 F

TDI
/page1 4 B
/sheet4 9 F

TDO
/page1 4 C
/sheet4 9 F

TMS
/page1 4 C
/sheet4 9 F

TRIGIN
/sheet5 15 F
/sheet4 9 F

TRIGOUT
/sheet5 15 F
/sheet4 9 F

TRST
/page1 4 C
/sheet4 9 F

TTRACE
/sheet4 13 D

TVCO
/sheet3 4 D
/sheet3 2 D
/sheet4 1 D
/sheet4 14 A
/sheet1 15 C

TX
/sheet4 9 C
/sheet7 13 E

TX_1
/sheet7 9 E

TX_GSM_OUT
/sheet1 4 B
/sheet1 7 G

TX_PCN_OUT
/sheet1 4 B
/sheet1 7 F

T_OUT8
/sheet4 7 D

VBAT
/sheet4 9 B
/sheet4 1 E

VCXOEN_UC
/sheet5 15 F
/sheet4 10 C
/sheet6 6 B

VDDA_2.65V
/sheet4 5 C
/sheet6 14 B
/sheet6 10 C

VDD_BRIGHT
/sheet1 8 F

/sheet1 10 A
/sheet1 10 B
/sheet1 12 D
/sheet1 10 A
/sheet1 9 F
/sheet1 9 A
/sheet1 8 A
/sheet1 8 F
/sheet1 8 A

VDD_CHARGE
/sheet6 5 B
/sheet6 7 C

VDD_RF1
/sheet3 2 E
/sheet3 4 E
/sheet10 7 C
/sheet6 14 B
/sheet1 11 A

VDD_RF2
/sheet3 4 E
/sheet3 2 E
/sheet6 14 B
/sheet1 11 C
/sheet1 11 A

VDD_RTC
/sheet4 4 C
/sheet4 9 C
/sheet6 14 B
/sheet6 7 C

VDD_SIM
/sheet4 15 D
/sheet4 4 C

VDIG_2.65V
/page1 2 B
/page1 2 B
/sheet4 14 B
/sheet4 10 A
/sheet4 4 C
/sheet4 10 B
/sheet6 14 B
/sheet6 2 G
/sheet6 2 F
/sheet6 11 C
/sheet7 11 F

VEBU_1.8
/sheet5 9 B
/sheet5 7 D
/sheet6 5 E

VEBU_1.8_1
/sheet5 5 D
/sheet5 5 D
/sheet5 2 D
/sheet5 4 D
/sheet5 7 D
/sheet5 7 D
/sheet5 7 D
/sheet5 7 D

VEBU_2.9
/sheet5 1 B
/sheet5 10 E
/sheet5 5 D
/sheet5 6 B
/sheet5 9 B
/sheet5 13 B
/sheet3 10 C
/sheet3 13 C

/sheet4 13 B
/sheet4 4 C
/sheet4 4 C
/sheet4 11 G
/sheet6 5 F
/sheet9 15 D
/sheet9 14 F

VIBRA_UC
/sheet4 14 D
/sheet8 10 C

VMIC
/sheet4 5 A
/sheet4 4 A

VREGA
/sheet6 7 E
/sheet6 10 D
/sheet6 8 E

WA_DOG
/sheet4 10 C
/sheet6 6 C

WR
/sheet5 15 E
/sheet5 5 B
/sheet5 13 B
/sheet5 10 D
/sheet4 10 F

				DATE	18.04.2005	Dorado B6E B2 Variant INT'L 64M_AMD leaded (V21) TOP HIERARCHY LEVEL SCHEMATIC	1:1
				USER	Chenh		
				APPR'D			
				COM MD PD HW4 BJ			
3	26105	18.04.2005	chenh	Siemens AG		145414	netlist1
2	22022	24.03.2005	Chenh				
1	22022	18.03.2005	Chenh				
VERS.	CHANGE NUMBER	DATE	NAME	(Created by BOM number: A5B00900172151-26105)			

Proprietary data, company confidential.
All rights reserved

Als Betriebsgeheimnis anvertraut
Alle Rechte vorbehalten

C3 /sheet6 2 E
C5 /sheet6 4 F
C6 /sheet6 4 F
C101 /sheet4 2 B
C102 /sheet4 3 B
C103 /sheet4 3 B
C104 /sheet4 4 B
C106 /sheet4 6 A
C107 /sheet4 6 A
C108 /sheet4 1 D
C110 /sheet4 1 D
C111 /sheet4 1 D
C113 /sheet4 1 D
C114 /sheet4 7 A
C115 /sheet4 7 A
C116 /sheet4 9 A
C131 /sheet4 13 A
C132 /sheet4 9 A
C150 /sheet4 4 C
C151 /sheet4 2 D
C152 /sheet4 4 B
C153 /sheet4 6 C
C154 /sheet4 6 C
C155 /sheet4 2 D
C156 /sheet4 6 C
C157 /sheet4 4 C
C158 /sheet4 4 C
C159 /sheet4 7 C
C160 /sheet4 10 C
C161 /sheet4 1 D
C162 /sheet4 1 D
C163 /sheet4 6 C
C164 /sheet4 6 E
C165 /sheet4 8 C
C166 /sheet4 1 D
C168 /sheet4 2 D
C169 /sheet4 11 C
C170 /sheet4 2 D
C171 /sheet4 2 C
C172 /sheet4 11 C
C173 /sheet4 11 C
C174 /sheet4 2 C
C175 /sheet4 4 D
C176 /sheet4 4 C
C177 /sheet5 11 A
C178 /sheet5 11 A
C179 /sheet5 1 B
C180 /sheet5 1 B
C181 /sheet7 3 C
C182 /sheet7 4 B
C183 /sheet7 3 B
C184 /sheet7 4 B
C185 /sheet5 2 B
C191 /sheet9 6 F
C192 /sheet9 6 F
C193 /sheet9 5 F
C194 /sheet9 4 F
C195 /sheet9 2 F
C196 /sheet9 6 F
C200 /sheet5 2 B
C201 /sheet5 13 B
C202 /sheet5 11 A
C203 /sheet6 2 G
C204 /sheet6 2 G
C207 /sheet5 2 B
C208 /sheet5 13 B
C209 /sheet5 2 B
C210 /sheet5 2 D
C211 /sheet5 6 D
C212 /sheet7 6 D
C213 /sheet7 9 F
C214 /sheet7 9 F
C215 /sheet7 10 F
C216 /sheet7 8 F
C217 /sheet7 7 F
C218 /sheet7 6 D
C219 /sheet7 10 F
C220 /sheet5 6 B
C221 /sheet7 7 F
C222 /sheet7 6 F
C223 /sheet7 6 F
C224 /sheet8 11 B
C225 /sheet8 10 C
C226 /sheet8 11 C
C227 /sheet7 8 F
C228 /sheet6 2 G
C229 /sheet6 4 G

C230 /sheet6 4 G
C236 /sheet6 1 G
C239 /sheet8 11 B
C241 /sheet8 4 B
C242 /sheet8 4 C
C243 /sheet8 4 C
C244 /sheet8 3 B
C245 /sheet8 3 F
C246 /sheet8 4 F
C247 /sheet8 4 G
C261 /sheet8 5 F
C262 /sheet8 5 G
C281 /sheet9 3 D
C282 /sheet9 7 D
C283 /sheet9 3 A
C284 /sheet9 3 A
C285 /sheet9 3 A
C286 /sheet9 6 A
C287 /sheet9 2 A
C288 /sheet9 2 A
C289 /sheet9 2 A
C295 /sheet9 15 B
C350 /sheet6 5 B
C351 /sheet6 5 B
C353 /sheet6 5 C
C354 /sheet6 5 C
C359 /sheet6 7 E
C360 /sheet6 7 E
C361 /sheet6 7 E
C362 /sheet6 7 B
C363 /sheet6 9 B
C364 /sheet6 7 B
C365 /sheet6 7 B
C366 /sheet6 7 B
C367 /sheet6 7 B
C368 /sheet6 12 B
C369 /sheet6 12 B
C370 /sheet6 12 B
C371 /sheet6 12 B
C372 /sheet6 13 B
C373 /sheet6 13 B
C374 /sheet6 13 B
C375 /sheet6 7 C
C376 /sheet6 6 D
C377 /sheet6 9 D
C379 /sheet6 10 D
C380 /sheet6 6 D
C381 /sheet6 5 D
C382 /sheet6 5 D
C383 /sheet6 10 D
C384 /sheet6 5 D
C385 /sheet6 9 E
C386 /sheet6 7 E
C389 /sheet6 11 E
C390 /sheet6 12 E
C392 /sheet6 12 E
C393 /sheet6 12 E
C395 /sheet6 13 B
C396 /sheet6 10 E
C397 /sheet6 11 E
C398 /sheet6 14 C
C399 /sheet6 11 C
C803 /sheet1 10 E
C804 /sheet7 5 B
C805 /sheet1 11 D
C807 /sheet7 5 B
C809 /sheet1 8 E
C817 /sheet1 13 E
C818 /sheet1 13 E
C819 /sheet1 14 E
C820 /sheet1 11 B
C821 /sheet1 11 C
C825 /sheet1 10 B
C826 /sheet1 9 B
C827 /sheet1 9 C
C828 /sheet1 9 C
C831 /sheet1 8 B
C872 /sheet10 6 B
C883 /sheet10 6 C
C886 /sheet1 4 C
C887 /sheet1 4 C
C900 /sheet1 4 F
C901 /sheet1 5 F
C902 /sheet1 5 G
C904 /sheet1 5 E
C905 /sheet1 2 E
C907 /sheet1 2 E

C908 /sheet1 4 E
C909 /sheet1 4 F
C910 /sheet1 2 F
C911 /sheet1 5 E
C912 /sheet1 6 E
C913 /sheet1 6 E
C916 /sheet1 6 E
C918 /sheet1 2 E
C951 /sheet1 12 C
C952 /sheet1 14 C
C953 /sheet1 14 C
C955 /sheet1 14 C
C956 /sheet1 15 C
C958 /sheet1 1 E
C961 /sheet1 10 B
C962 /sheet1 8 E
C965 /sheet1 10 B
C8111 /sheet10 2 C
C8112 /sheet10 3 C
C8869 /sheet10 7 B
C8870 /sheet10 7 B
C8872 /sheet10 6 B
C8873 /sheet10 7 B
D171-1 /sheet4 2 E
D171-2 /sheet4 13 F
D202 /sheet5 11 D
D204 /sheet5 3 E
D205 /sheet5 8 G
D361 /sheet6 8 E
D901 /sheet1 3 F
D902 /sheet1 4 B
D903 /sheet1 8 E
L214 /sheet7 8 E
L215 /sheet7 8 E
L216 /sheet7 7 E
L280 /sheet9 2 A
L902 /sheet1 5 F
L903 /sheet1 4 G
L904 /sheet1 9 B
L905 /sheet1 5 G
L8100 /sheet10 3 B
L8871 /sheet10 7 B
L8874 /sheet10 7 B
N280 /sheet9 4 B
N307 /sheet6 2 E
N308 /sheet6 2 G
R101-2 /sheet4 2 A
R101-1 /sheet4 3 A
R102-2 /sheet4 4 A
R102-1 /sheet4 4 A
R103 /sheet4 2 B
R104 /sheet4 4 B
R105 /sheet4 6 A
R106 /sheet4 6 E
R111 /sheet4 1 E
R131 /sheet4 11 B
R132 /sheet4 11 B
R133 /sheet4 11 B
R134 /sheet4 11 B
R135 /sheet4 12 B
R136 /sheet4 12 B
R137 /sheet4 11 A
R138 /sheet4 12 B
R139 /sheet4 6 E
R140 /sheet4 15 D
R141 /sheet4 10 A
R143 /sheet4 9 A
R144 /sheet4 14 B
R145 /sheet4 14 B
R146 /sheet4 9 B
R147 /sheet4 10 G
R148 /sheet4 14 B
R149 /sheet4 15 B
R153 /sheet4 4 C
R156 /sheet4 11 F
R158 /sheet4 8 C
R159 /sheet4 10 C
R160 /sheet4 6 D
R161 /sheet4 10 C
R162 /sheet4 15 D
R168 /sheet4 13 A
R169 /sheet4 14 A
R191 /sheet9 6 E
R192 /sheet9 4 E
R193 /sheet9 6 F
R200 /sheet9 14 E
R201 /sheet9 14 F

R202 /sheet9 3 B
R204 /sheet9 13 E
R205 /sheet5 10 B
R206 /sheet5 6 B
R207 /sheet5 10 B
R210 /sheet5 12 D
R211 /sheet7 5 F
R212 /sheet7 5 F
R213 /sheet7 5 F
R216 /sheet7 3 B
R220 /sheet8 10 C
R221 /sheet9 2 D
R222 /sheet9 6 D
R238 /sheet8 10 B
R241 /sheet8 4 C
R242 /sheet8 4 B
R243 /sheet8 5 F
R244 /sheet8 5 F
R270 /sheet9 5 B
R271 /sheet8 12 D
R272 /sheet8 12 D
R273 /sheet8 13 D
R274 /sheet8 13 D
R276 /sheet8 14 D
R277 /sheet8 10 B
R278 /sheet8 12 C
R279 /sheet8 12 B
R280 /sheet9 6 D
R281 /sheet9 2 D
R287 /sheet9 10 B
R288 /sheet9 11 B
R289 /sheet9 12 B
R290 /sheet9 13 B
R291 /sheet9 14 B
R292 /sheet9 14 B
R293 /sheet9 11 C
R295 /sheet9 9 A
R352 /sheet6 5 C
R361 /sheet6 2 C
R362 /sheet6 3 C
R363 /sheet6 4 C
R364 /sheet6 4 D
R365 /sheet6 4 D
R366 /sheet6 5 D
R368 /sheet6 9 B
R371 /sheet6 7 C
R372 /sheet6 10 E
R373 /sheet6 3 B
R390 /sheet6 9 C
R391 /sheet6 10 C
R395 /sheet6 7 C
R396 /sheet6 10 C
R397 /sheet6 7 B
R500 /page1 3 B
R805 /sheet1 11 D
R806 /sheet1 11 D
R824 /sheet1 9 B
R872 /sheet10 6 C
R873 /sheet10 6 C
R881 /sheet1 3 B
R882 /sheet1 3 C
R902 /sheet1 8 F
R907 /sheet1 2 E
R908 /sheet1 5 F
R910 /sheet1 5 E
R951 /sheet1 14 C
R952 /sheet1 14 C
R953 /sheet1 14 C
R954 /sheet1 15 C
R955 /sheet1 15 C
R956 /sheet1 11 A
R957 /sheet1 11 A
R958 /sheet1 11 B
R959 /sheet1 12 C
R960 /sheet1 13 C
R961 /sheet1 13 C
TP134 /sheet5 7 B
TP154 /sheet4 9 F
TP157 /sheet4 7 E
TP110 /sheet4 13 A
TP152 /sheet4 9 F
TP131 /sheet4 14 A
TP132 /sheet4 10 A
TP156 /sheet4 9 F
TP158 /sheet4 4 D
TP155 /sheet4 9 F
TP153 /sheet4 9 F

TP150 /sheet4 9 F
TP151 /sheet4 9 F
TP361 /sheet6 2 C
TP365 /sheet6 7 C
TP371 /sheet6 10 C
TP369 /sheet6 14 B
TP366 /sheet6 14 B
TP367 /sheet6 14 B
TP363 /sheet6 14 B
TP302 /sheet6 13 D
TP301 /sheet6 13 D
TP362 /sheet6 10 B
TP368 /sheet6 14 B
TP900 /sheet1 1 E
TP820 /sheet1 13 D
TP3971 /sheet1 12 A
TP208 /sheet9 12 E
TP281 /sheet9 4 C
TP209 /sheet9 12 E
TP207 /sheet9 12 E
TP213 /sheet7 5 E
TP812 /sheet7 5 B
TP813 /sheet7 2 C
TP811 /sheet7 5 B
TP810 /sheet7 3 B
TP814 /sheet7 2 C
TP214 /sheet7 5 E
V151 /sheet4 8 E
V191 /sheet9 3 F
V211 /sheet8 11 C
V220 /sheet8 11 C
V222-1 /sheet9 6 D
V222-2 /sheet9 3 D
V286 /sheet9 10 B
V287 /sheet9 11 B
V288 /sheet9 12 B
V289 /sheet9 13 B
V290 /sheet9 14 B
V291 /sheet9 14 B
V361-1 /sheet6 3 C
V361-2 /sheet6 4 C
V950 /sheet1 13 C
X100 /sheet4 2 G
X181 /sheet7 2 B
X191 /sheet9 1 E
X211 /sheet7 2 E
X251 /sheet9 11 E
X252 /sheet9 10 F
X300 /sheet1 9 G
X870 /sheet10 5 B
X873 /sheet10 7 D
Z171 /sheet4 11 C
Z211 /sheet7 10 E
Z950 /sheet1 13 C

				DATE	18.04.2005
				USER	Chenh
				APPR'D	
				COM MD PD HW4 BJ	
3	26105	18.04.2005	chenh	Siemens AG	
2	22022	24.03.2005	Chenh		
1	22022	18.03.2005	Chenh		
VERS.	CHANGE NUMBER	DATE	NAME		

Dorado B6E B2 Variant
INT'L 64M_AMD leaded (V21)
TOP HIERARCHY LEVEL
SCHEMATIC

1:1

145414

poslist1

(Created by BOM number: A5B00900172151-26105)

Proprietary data, Company confidential.
all rights reserved

Als Betriebsgeheimnis anvertraut
alle Rechte vorbehalten

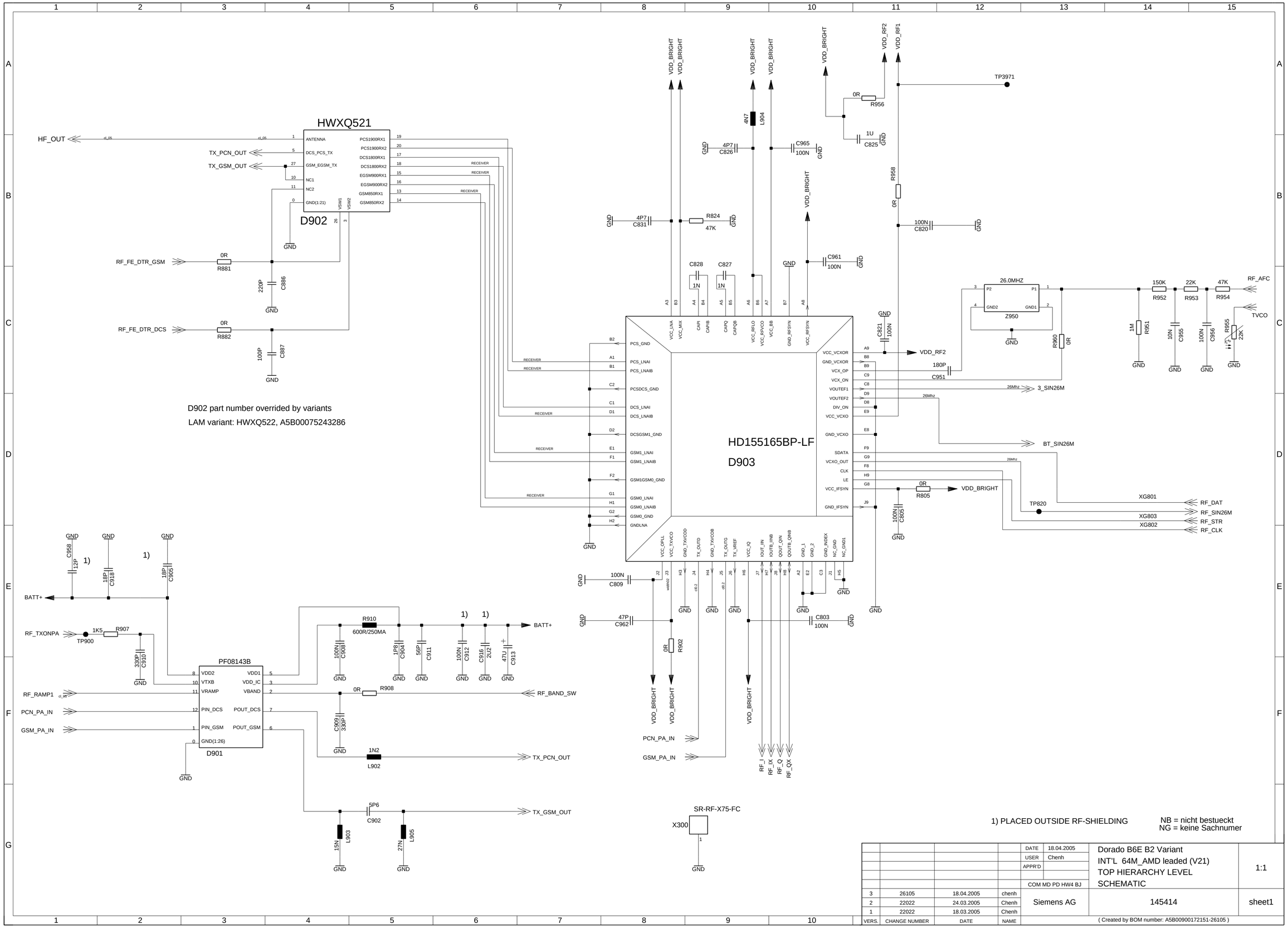

				DATE 18.04.2005	Dorado B6E B2 Variant
				USER Chenh	INT'L 64M_AMD leaded (V21)
				APPR'D	TOP HIERARCHY LEVEL
				COM MD PD HW4 BJ	SCHEMATIC
3	26105	18.04.2005	chenh	Siemens AG	145414
2	22022	24.03.2005	Chenh		
1	22022	18.03.2005	Chenh		
VERS.	CHANGE NUMBER	DATE	NAME	(Created by BOM number: A5B00900172151-26105)	

1:1

sheet1

Proprietary data, Company confidential.
all rights reserved

Als Betriebsgeheimnis anvertraut
alle Rechte vorbehalten

RF Shielding

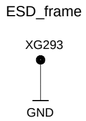

				DATE	18.04.2005	Dorado B6E B2 Variant INT'L 64M_AMD leaded (V21) TOP HIERARCHY LEVEL SCHEMATIC	1:1
				USER	Chenh		
				APPR'D			
				COM MD PD HW4 BJ			
3	26105	18.04.2005	chenh	Siemens AG		145414	sheet2
2	22022	24.03.2005	Chenh				
1	22022	18.03.2005	Chenh				
VERS.	CHANGE NUMBER	DATE	NAME	(Created by BOM number: A5B00900172151-26105)			

Proprietary data, Company confidential.
all rights reserved

Als Betriebsgeheimnis anvertraut
alle Rechte vorbehalten

HIT_POINTS LOGIK/HF_PART_1

400-449

RF_STR	XG400	RF_STR	TRANCEIVER ENABLE SIGNAL
RF_CLK	XG401	RF_CLK	TRANCEIVER CLOCK SIGNAL
RF_DAT	XG402	RF_DAT	TRANCEIVER DATA SIGNAL
RF_I	XG403	RF_I	Bidirectional analoue RX/TX modulatet signal
RF_IX	XG404	RF_IX	
RF_Q	XG405	RF_Q	Baseband signals
RF_QX	XG406	RF_QX	
RF_AFC	XG409	RF_AFC	Reference freqency correction
RF_FE_DTR_DCS	XG412	RF_FE_DTR_DCS	DCSTX enable Asic for Hitachisolution
RF_FE_DTR_GSM	XG417	RF_FE_DTR_GSM	GSMTX enable Asic for Hitachisolution
RF_RAMP1	XG413	RF_RAMP1	analogue power amplifier ramping signal
RF_SIN26M	XG414	RF_SIN26M	26 MHz reference frequency
3_SIN26M	XG436	3_SIN26M	(Placeholder for 3_SIN26M)
BT_SIN26M	XG537	BT_SIN26M	(Placeholder for BT_SIN26M)
RF_TXONPA	XG415	RF_TXONPA	Power up of power controller
TVCO	XG416	TVCO	Temperature sensor X-tal
RF_ANT_DET	XG419	RF_ANT_DET	DETECTION internal/external Antenna
VDD_RF1	XG421	VDD_RF1	programmed voltage 1
VDD_RF2	XG418	VDD_RF2	programmed voltage 2
RF_BAND_SW	XG424	RF_BAND_SW	swiched LOW- / HIGH-band

VEBU_2.9	XG2402	VEBU_2.9
LCD_DAT	XG2812	LCD_DAT
LCD_RS	XG2813	LCD_RS
LCD_CS	XG2814	LCD_CS
LCD_RESET	XG2815	LCD_RESET
LCD_LED1_A	XG2816	LCD_LED1_A
LCD_LED2_A	XG2817	LCD_LED2_A
LIGHT_K	XG2818	LIGHT_K
BATT+	XG2823	BATT+

VERS.	CHANGE NUMBER	DATE	NAME		
				DATE	18.04.2005
				USER	Chenh
				APPR'D	
				COM MD PD HW4 BJ	
3	26105	18.04.2005	chenh	Siemens AG	
2	22022	24.03.2005	Chenh		
1	22022	18.03.2005	Chenh		

Dorado B6E B2 Variant
INT'L 64M_AMD leaded (V21)
TOP HIERARCHY LEVEL
SCHEMATIC

1:1

145414

sheet3

(Created by BOM number: A5B00900172151-26105)

Proprietary data. Company confidential.
all rights reserved

Als Betriebsgeheimnis anvertraut
alle Rechte vorbehalten

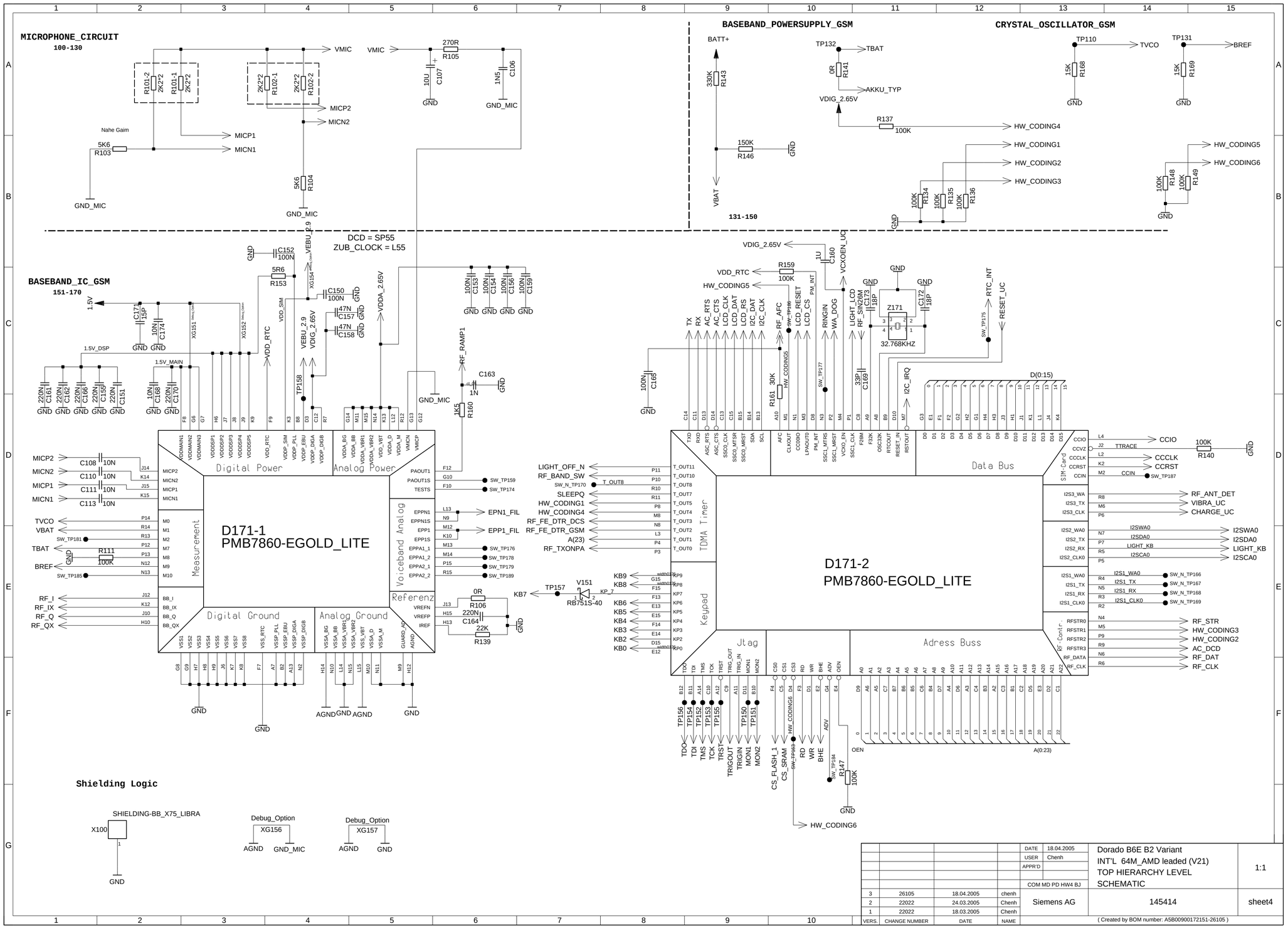

Proprietary data, Company confidential.
all rights reserved

Als Betriebsgeheimnis anvertraut
alle Rechte vorbehalten

BASEBAND_FLASH_GSM

201 - 210

C200 an J8+K7+K5 in PCB
C209 an C5 in PCB
C207 an L3 in PCB

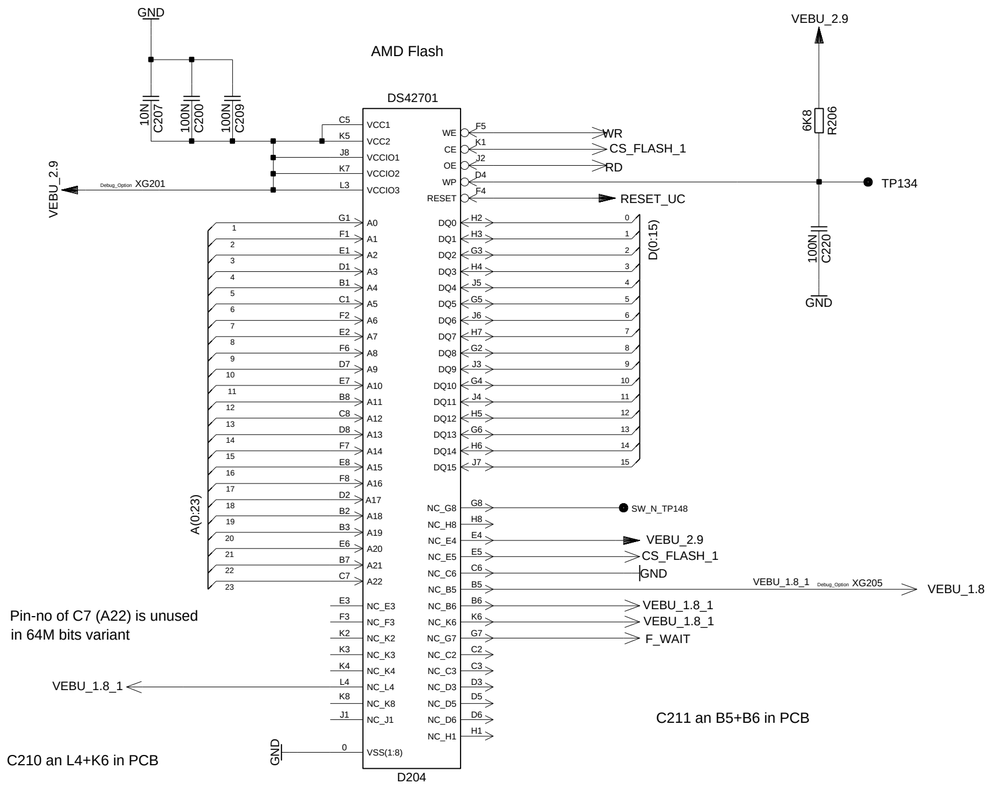

Pin-no of C7 (A22) is unused
in 64M bits variant

C210 an L4+K6 in PCB

C211 an B5+B6 in PCB

D204 part number overrided by variants
128Mbit footprint: for layout, VNB
64Mbit variant: A5B00075417445 (Leadfree)
32Mbit variant: A5B00075431843 (Leadfree)
64Mbit variant: A5B00075064155 (Leaded)

BASEBAND_SRAM_GSM

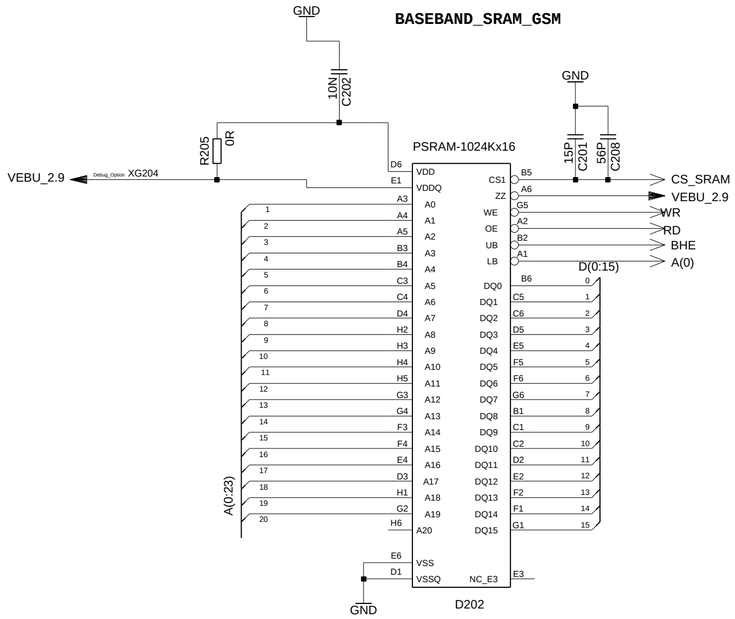

SW-TESTPUNKTE

100 - 153

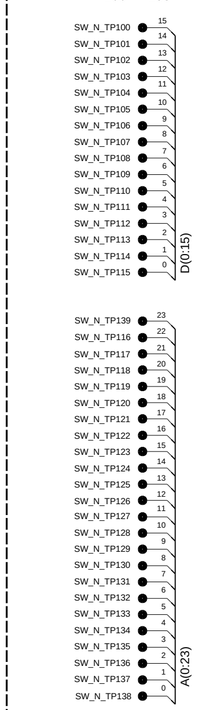

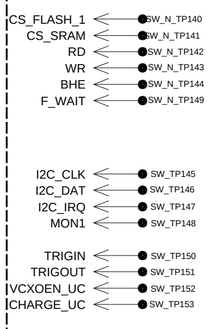

D205: Second source Intel Flash

VERS.	CHANGE NUMBER	DATE	NAME			
				DATE	18.04.2005	Dorado B6E B2 Variant INT'L 64M_AMD leaded (V21) TOP HIERARCHY LEVEL SCHEMATIC	1:1
				USER	Chenh		
				APPR'D			
				COM MD PD HW4 BJ			
3	26105	18.04.2005	chenh	Siemens AG		145414	sheet5
2	22022	24.03.2005	Chenh				
1	22022	18.03.2005	Chenh				

(Created by BOM number: A5B00900172151-26105)

Proprietary data, Company confidential.
all rights reserved

Als Betriebsgeheimnis anvertraut
alle Rechte vorbehalten

BASEBAND_POWERSUPPLY_GSM

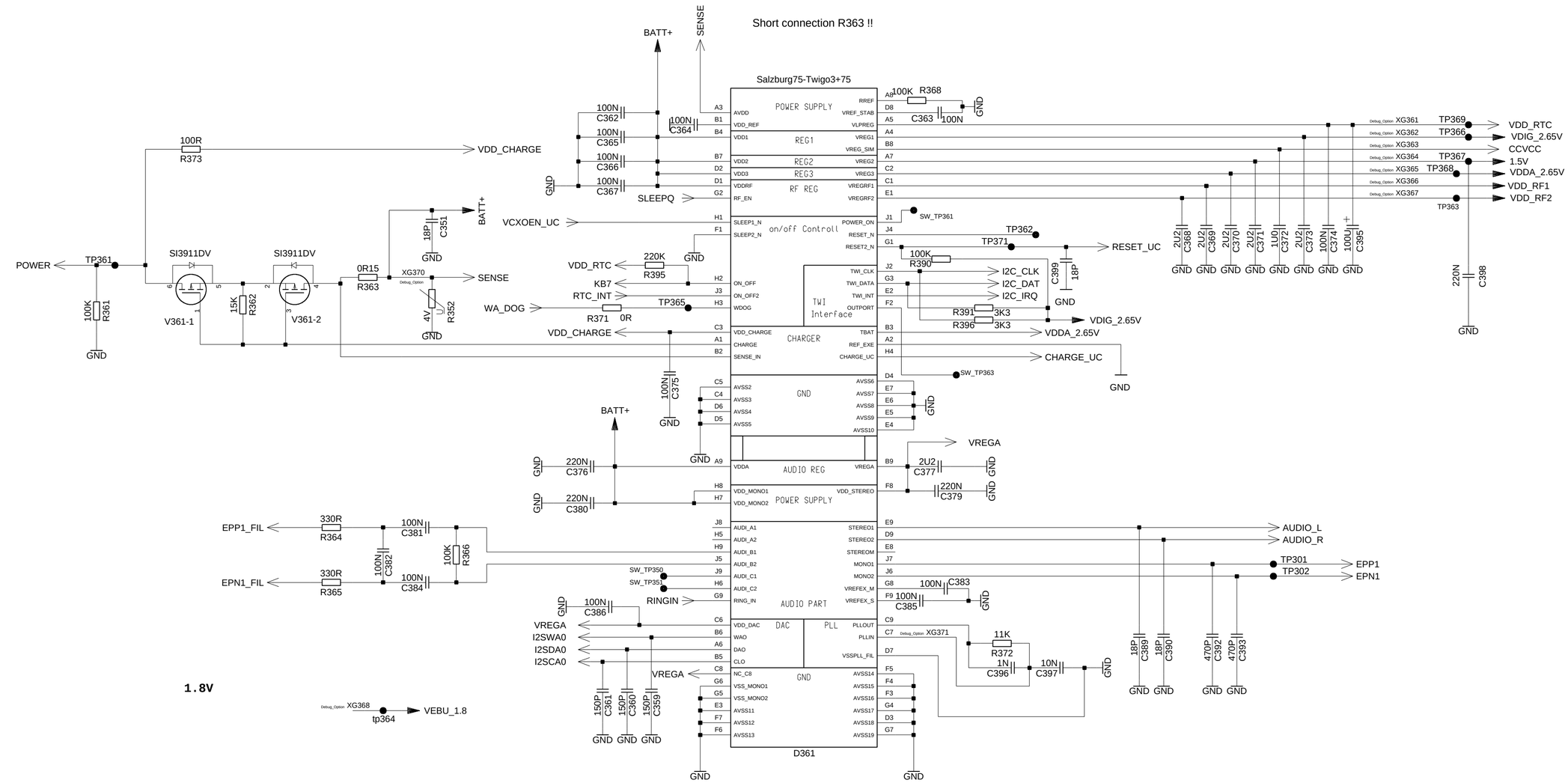

				DATE 18.04.2005	Dorado B6E B2 Variant
				USER Chenh	INT'L 64M_AMD leaded (V21)
				APPR'D	TOP HIERARCHY LEVEL
				COM MD PD HW4 BJ	SCHEMATIC
3	26105	18.04.2005	chenh	Siemens AG	145414
2	22022	24.03.2005	Chenh		
1	22022	18.03.2005	Chenh		
VERS.	CHANGE NUMBER	DATE	NAME	(Created by BOM number: A5B00900172151-26105)	

1:1

sheet6

Proprietary data, Company confidential.
all rights reserved

Als Betriebsgeheimnis anvertraut
alle Rechte vorbehalten

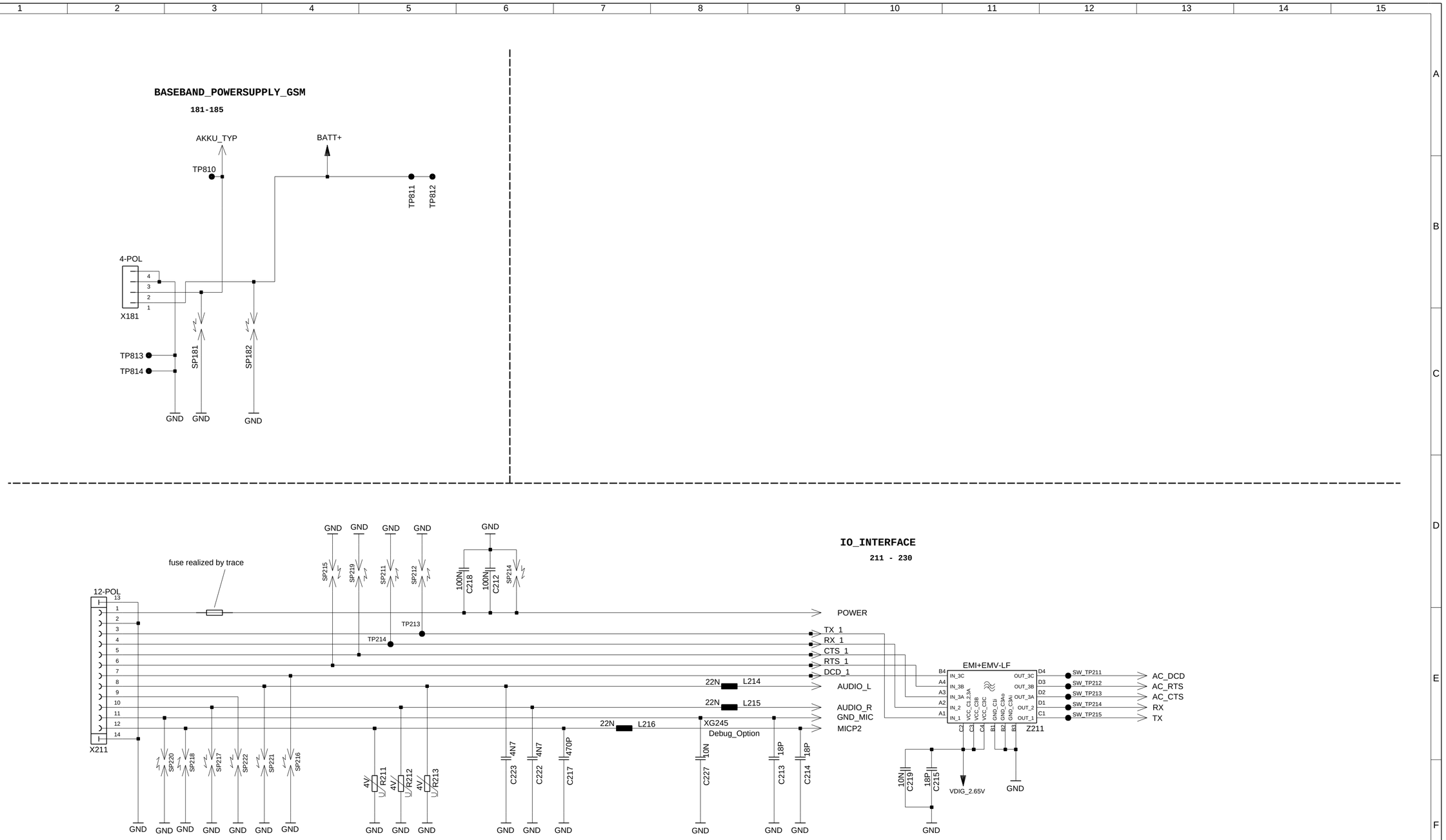

				DATE	18.04.2005	Dorado B6E B2 Variant INT'L 64M_AMD leaded (V21) TOP HIERARCHY LEVEL SCHEMATIC	1:1
				USER	Chenh		
				APPR'D			
				COM MD PD HW4 BJ			
3	26105	18.04.2005	chenh	Siemens AG		145414	sheet7
2	22022	24.03.2005	Chenh				
1	22022	18.03.2005	Chenh				
VERS.	CHANGE NUMBER	DATE	NAME	(Created by BOM number: A5B00900172151-26105)			

Proprietary data, Company confidential.
all rights reserved

Als Betriebsgeheimnis anvertraut
alle Rechte vorbehalten

MICROPHONE_CIRCUIT
241-250

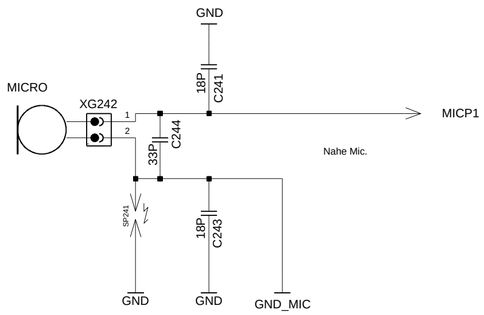

VIBRA_CIRCUIT
211 - 230

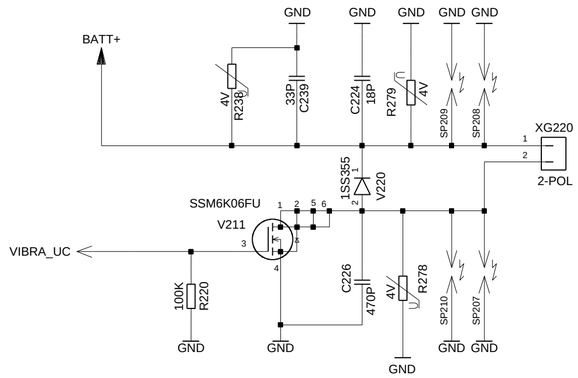

MMI

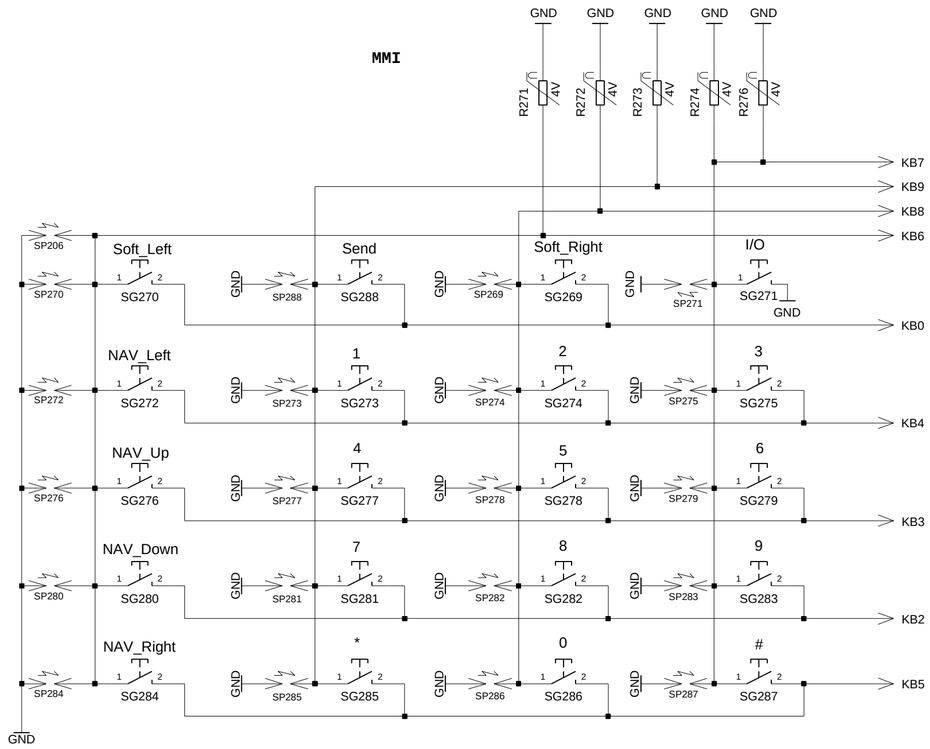

SPEAKER_CIRCUIT

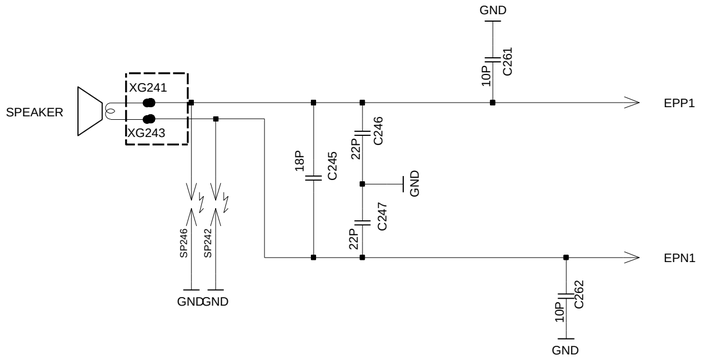

				DATE	18.04.2005
				USER	Chenh
				APPR'D	
				COM MD PD HW4 BJ	
3	26105	18.04.2005	chenh		
2	22022	24.03.2005	Chenh		
1	22022	18.03.2005	Chenh		
VERS.	CHANGE NUMBER	DATE	NAME		

Dorado B6E B2 Variant
INT'L 64M_AMD leaded (V21)
TOP HIERARCHY LEVEL
SCHEMATIC

1:1

Siemens AG

145414

sheet8

(Created by BOM number: A5B00900172151-26105)

Proprietary data, Company confidential.
all rights reserved

Als Betriebsgeheimnis anvertraut
alle Rechte vorbehalten

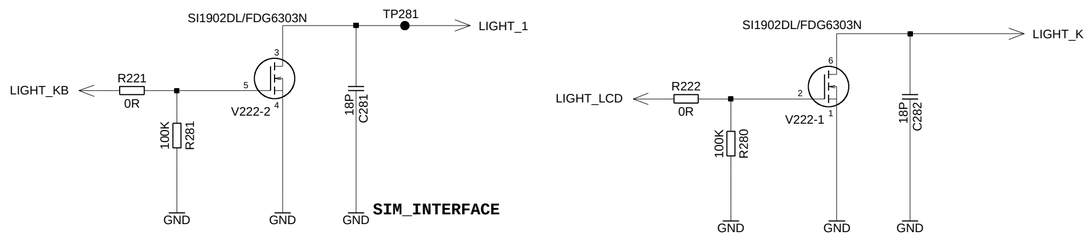

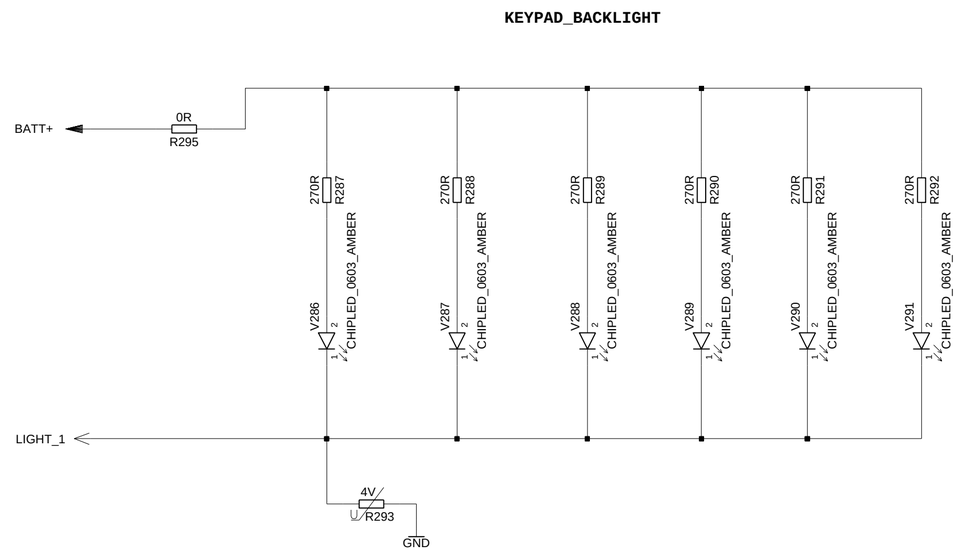

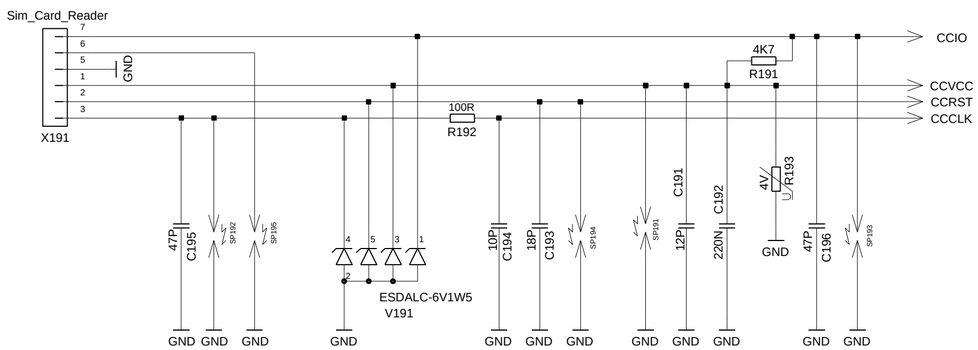

Logic/Display_Interface

251-270

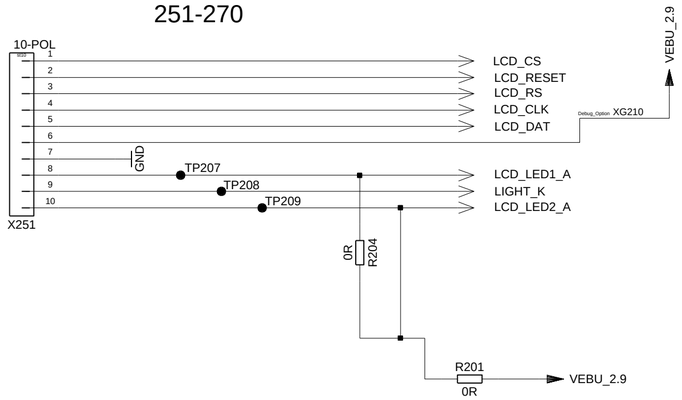

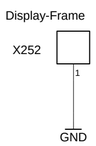

				DATE	18.04.2005	Dorado B6E B2 Variant
				USER	Chenh	INT'L 64M_AMD leaded (V21)
				APPR'D		TOP HIERARCHY LEVEL
				COM MD PD HW4 BJ		SCHEMATIC
3	26105	18.04.2005	chenh	Siemens AG		145414
2	22022	24.03.2005	Chenh			
1	22022	18.03.2005	Chenh			
VERS.	CHANGE NUMBER	DATE	NAME	(Created by BOM number: A5B00900172151-26105)		

1:1

sheet9

Proprietary data, company confidential.
All rights reserved

Als Betriebsgeheimnis anvertraut
Alle Rechte vorbehalten

ANTENNA _CIRCUIT

870 - 884

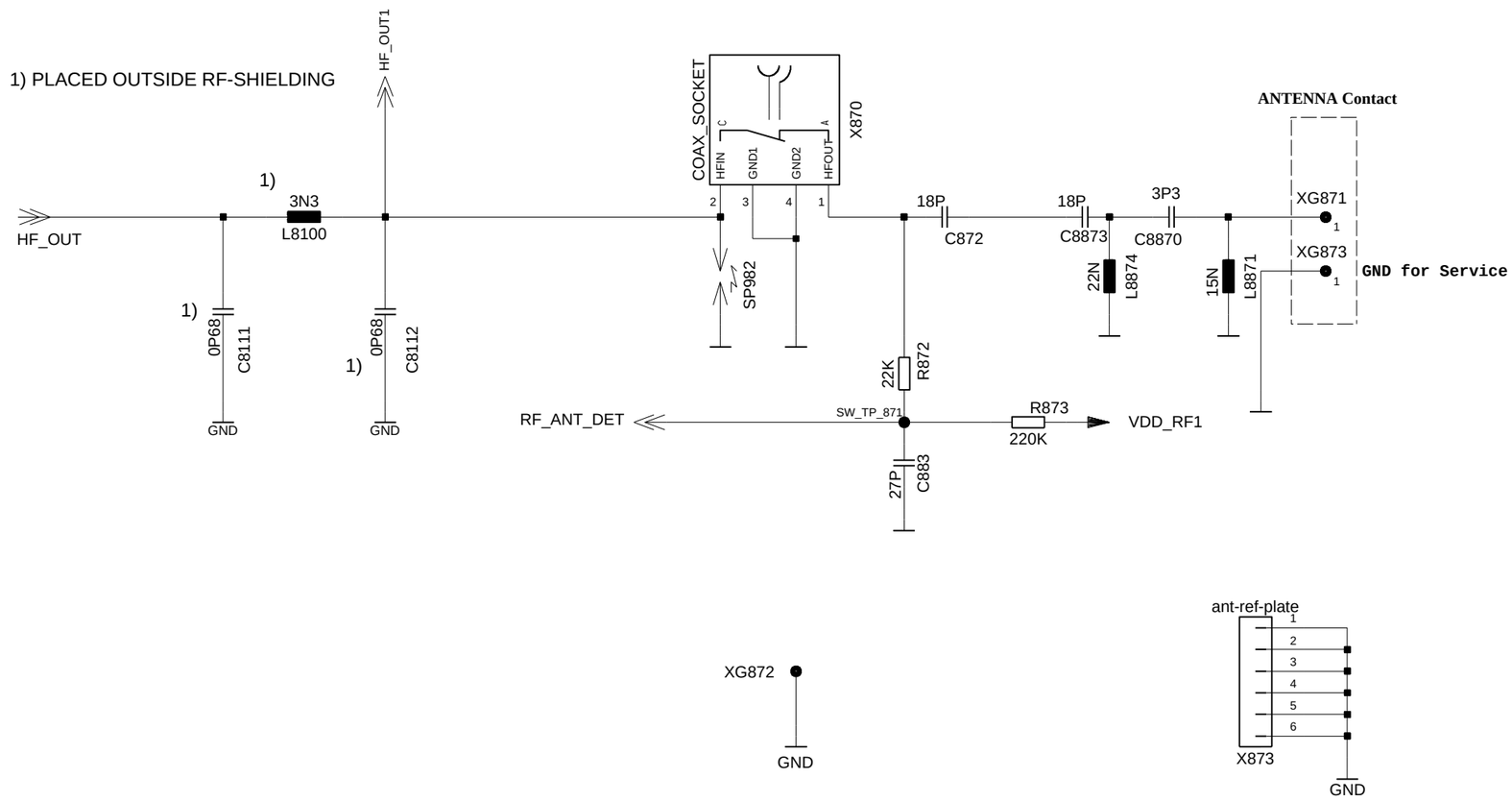

				DATE	18.04.2005	Dorado B6E B2 Variant INT'L 64M_AMD leaded (V21) TOP HIERARCHY LEVEL SCHEMATIC	1:1
				USER	Chenh		
				APPR'D			
				COM MD PD HW4 BJ			
3	26105	18.04.2005	chenh	Siemens AG		145414	sheet10
2	22022	24.03.2005	Chenh				
1	22022	18.03.2005	Chenh				
VERS.	CHANGE NUMBER	DATE	NAME	(Created by BOM number: A5B00900172151-26105)			

PROPRIETARY DATA, COMPANY CONFIDENTIAL
ALL RIGHTS RESERVED

ALS BETRIEBSGEHEIMNIS ANVERTRAUT
ALLE RECHTE VORBEHALTEN

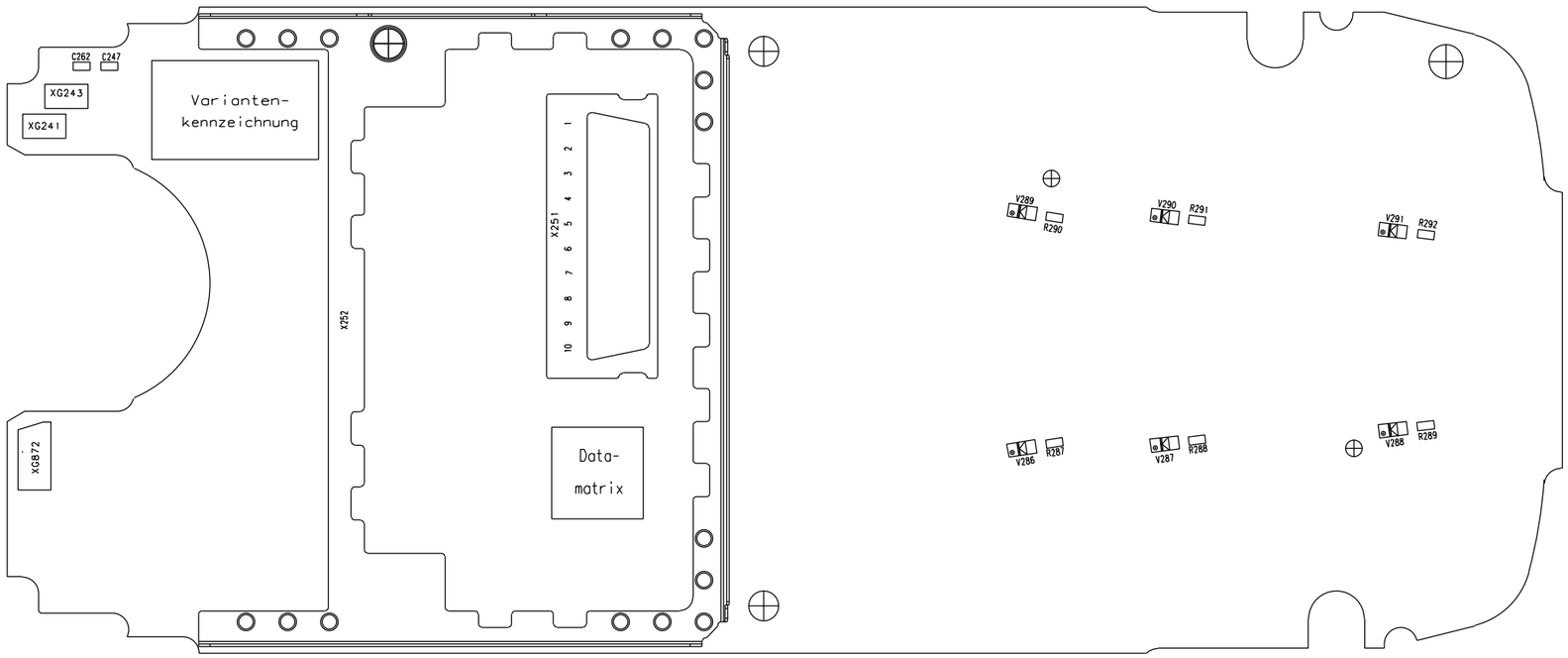

C247	2B
C262	2B
R287	6C
R288	7C
R289	8C
R290	6B
R291	7B
R292	8B
V286	6C
V287	7C
V288	8C
V289	6B
V290	7B
V291	8B
X251	4B
X252	5C

Achtung : Hoehenprofil C24___-___-___-__-42 (gilt nur fuer Entwicklung)
Liefervarianten siehe : V24851-Z2000-A1-*-35

VERS.	CHANGE NUMBER	DATE	NAME
3	26105	18.04.2005	chenh
2	22022	24.03.2005	Chenh
1	22022	18.03.2005	Chenh

DATE	18.04.2005
NAME	Chenh
APPR'D	
STD	
COM MD PD HW4 BJ	

SIEMENS AG

Dorado B6E B2 Variant
INT'L 64M_AMD leaded (V21)
WIRING DIAGRAMM (SOLDER SIDE 1)

3:1

145415

SHEET 1+

(Created by BOM number: A5B00900172151-26105)

PROPRIETARY DATA, COMPANY CONFIDENTIAL
ALL RIGHTS RESERVED

ALS BETRIEBSGEHEIMNIS ANVERTRAUT
ALLE RECHTE VORBEHALTEN

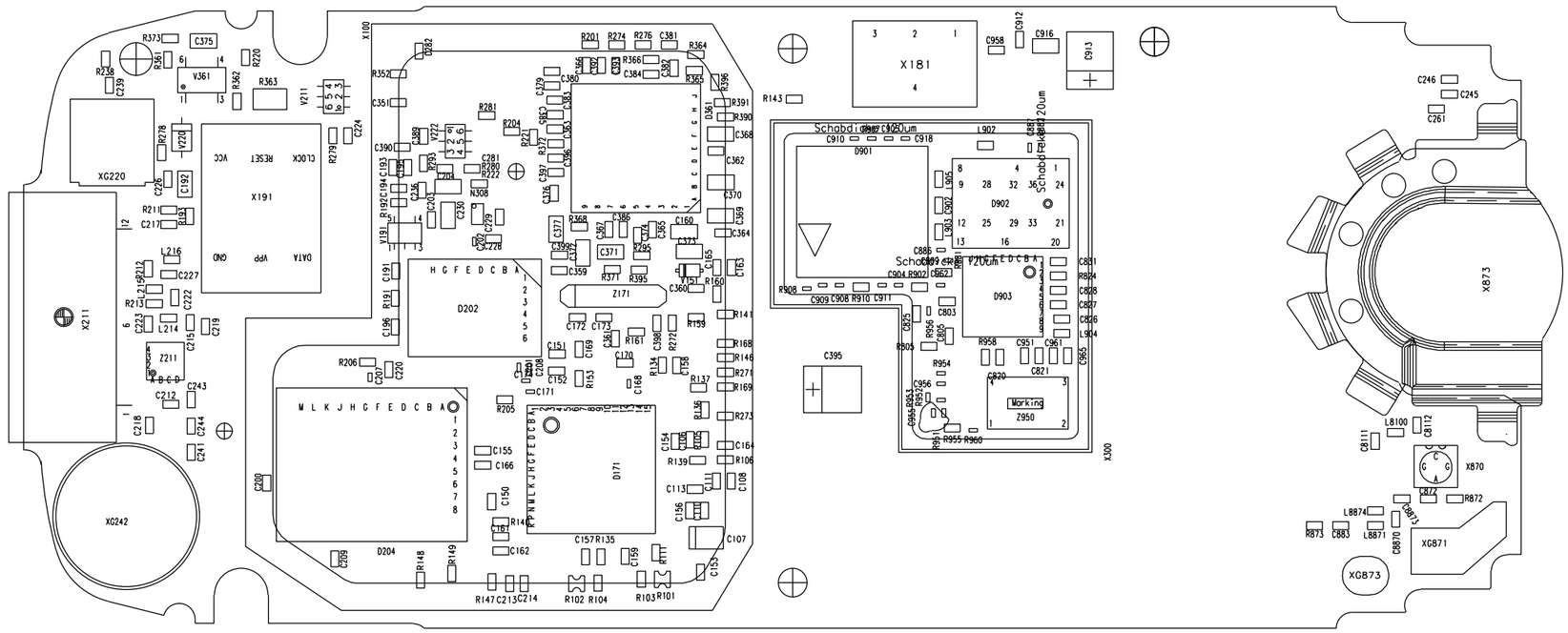

C106	4C	C169	4C	C217	2C	C360	4C	C385	4B	C887	6B	D204	3C	R135	4D	R211	2B	R366	4B	R956	6C
C107	4D	C170	4C	C218	2C	C361	4C	C386	4C	C902	6B	D361	4B	R136	5C	R212	2C	R368	4C	R958	6C
C108	5C	C171	4C	C219	2C	C362	5B	C389	3B	C904	6C	D901	5C	R137	5C	R213	2C	R371	4C	R960	6C
C110	5D	C172	4C	C220	3C	C363	4B	C390	3B	C905	5B	D902	6B	R139	4C	R220	2B	R372	4B	V151	4C
C111	5C	C173	4C	C222	2C	C364	5C	C392	4B	C909	5C	D903	6C	R140	4D	R221	4B	R373	2B	V191	3C
C113	5C	C174	4C	C223	2C	C365	4C	C393	4B	C910	5B	L214	2C	R141	5C	R222	4B	R390	5B	V211	3B
C150	4C	C191	3C	C224	3B	C366	4B	C395	5C	C911	5C	L215	2C	R143	5B	R238	2B	R391	5B	V220	2B
C151	4C	C192	2B	C226	2B	C367	4C	C396	4B	C912	6B	L216	2C	R146	5C	R271	5C	R395	4C	V222	3B
C152	4C	C193	3B	C227	2C	C368	5B	C397	4B	C913	6B	L902	6B	R147	4D	R272	4C	R396	5B	V361	2B
C153	5D	C194	3B	C228	4C	C369	5C	C398	4C	C916	6B	L903	6C	R148	3D	R273	5C	R805	6C	X100	2C
C154	4C	C195	3B	C229	4B	C370	5B	C399	4C	C918	6B	L904	6C	R149	3D	R274	4B	R824	6C	X181	6B
C155	3C	C196	3C	C230	3B	C371	4C	C803	6C	C951	6C	L905	6B	R153	4C	R276	4B	R872	8C	X191	2B
C156	4D	C200	2C	C236	3B	C372	4C	C805	6C	C955	6C	L8100	8C	R159	4C	R278	2B	R873	7D	X211	2C
C157	4D	C201	4C	C239	2B	C373	5C	C809	6C	C956	6C	L8871	8D	R160	5C	R279	3B	R881	6C	X300	6C
C158	4C	C202	3C	C241	2C	C374	4C	C820	6C	C958	6B	L8874	8D	R161	4C	R280	3B	R882	6B	X870	8C
C159	4D	C203	3B	C243	2C	C375	2B	C821	6C	C961	6C	N308	3B	R168	5C	R281	3B	R902	6C	X873	8C
C160	5C	C204	3B	C244	2C	C376	4B	C825	6C	C962	6C	R101	4D	R169	5C	R293	3B	R907	5B	Z171	4C
C161	4D	C207	3C	C245	8B	C377	4C	C826	6C	C965	6C	R102	4D	R191	3C	R295	4C	R908	5C	Z211	2C
C162	4D	C208	4C	C246	8B	C379	4B	C827	6C	C8111	8C	R103	4D	R192	3B	R352	3B	R910	5C	Z950	6C
C163	5C	C209	3D	C261	8B	C380	4B	C828	6C	C8112	8C	R104	4D	R193	2C	R361	2B	R951	6C		
C164	5C	C212	2C	C281	3B	C381	4B	C831	6C	C8870	8D	R105	5C	R201	4B	R362	2B	R952	6C		
C165	5C	C213	4D	C282	3B	C382	4B	C872	8C	C8873	8C	R106	5C	R204	4B	R363	2B	R953	6C		
C166	3C	C214	4D	C351	3B	C383	4B	C883	8D	D171	4C	R111	4D	R205	4C	R364	5B	R954	6C		
C168	4C	C215	2C	C359	4C	C384	4B	C886	6C	D202	4C	R134	4C	R206	3C	R365	5B	R955	6C		

Achtung : Hoehenprofil C24___-___-___-__-42 (gilt nur fuer Entwicklung)
Liefervarianten siehe : V24851-Z2000-A1-*-35

VERS.	CHANGE NUMBER	DATE	NAME
3	26105	18.04.2005	chenh
2	22022	24.03.2005	Chenh
1	22022	18.03.2005	Chenh

DATE	18.04.2005
NAME	Chenh
APPR'D	
STD	
COM MD PD HW4 BJ	

Dorado B6E B2 Variant
INT'L 64M_AMD leaded (V21)
WIRING DIAGRAMM (SOLDER SIDE 2)

3:1

SIEMENS AG

145415

SHEET 2+

(Created by BOM number: A5B00900172151-26105)

PROPRIETARY DATA, COMPANY CONFIDENTIAL
ALL RIGHTS RESERVED

ALS BETRIEBSGEHEIMNIS ANVERTRAUT
ALLE RECHTE VORBEHALTEN

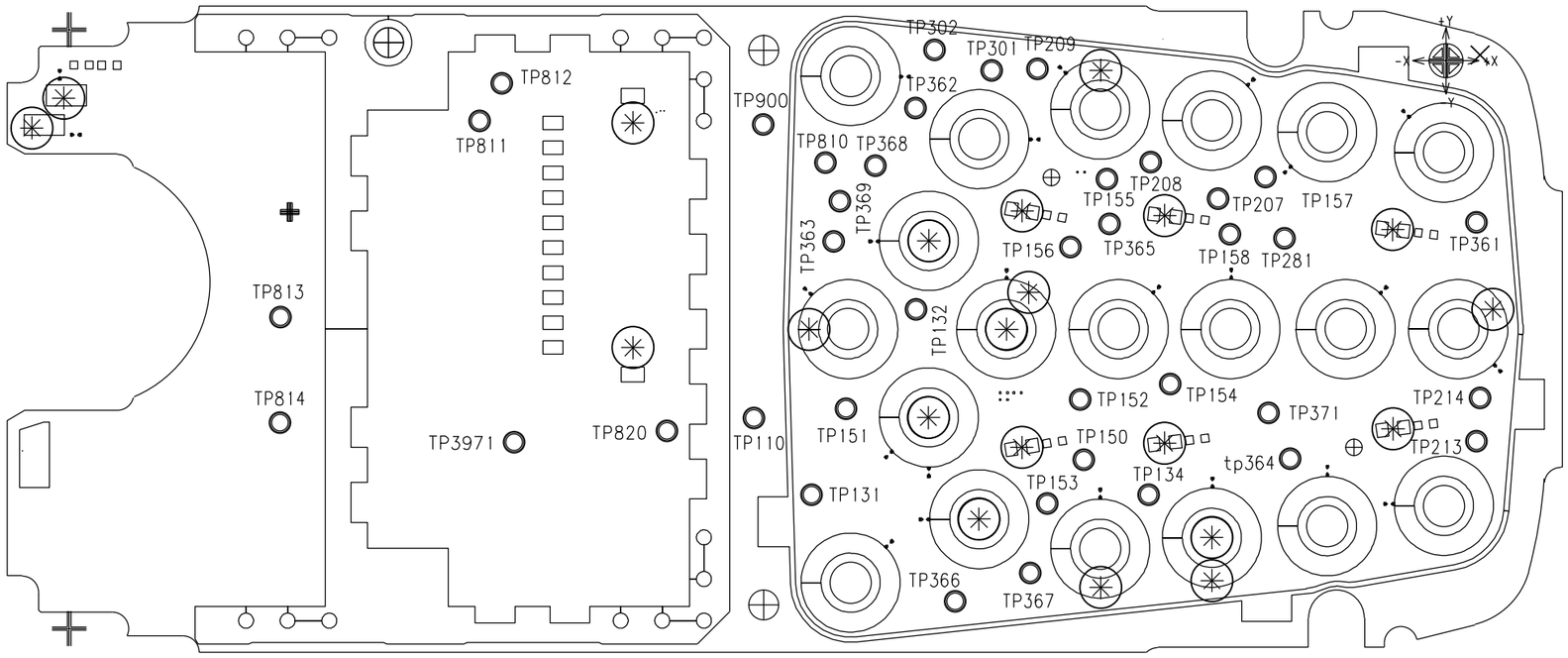

TP110	5C	TP366	6D
TP131	5C	TP367	6D
TP132	6C	TP368	6B
TP134	7C	TP369	5B
TP150	6C	TP371	7C
TP151	5C	TP810	5B
TP152	6C	TP811	4B
TP153	6C	TP812	4B
TP154	7C	TP813	3C
TP155	7B	TP814	3C
TP156	6B	TP820	5C
TP157	7B	TP900	5B
TP158	7B	TP3971	4C
TP207	7B		
TP208	7B		
TP209	6B		
TP213	8C		
TP214	8C		
TP281	7B		
TP301	6B		
TP302	6B		
TP361	8B		
TP362	6B		
TP363	5B		
TP364	7C		
TP365	7B		

				DATE	18.04.2005	Dorado B6E B2 Variant INT'L 64M_AMD leaded (V21) TESTPOINT DIAGRAMM (SIDE 1)	3:1
				NAME	Chenh		
				APPR'D			
				STD			
				COM MD PD HW4 BJ			
3	26105	18.04.2005	chenh	SIEMENS AG		145416	SHEET 1+
2	22022	24.03.2005	Chenh				
1	22022	18.03.2005	Chenh				
VERS.	CHANGE NUMBER	DATE	NAME	(Created by BOM number: A5B00900172151-26105)			

PROPRIETARY DATA, COMPANY CONFIDENTIAL
ALL RIGHTS RESERVED

ALS BETRIEBSGEHEIMNIS ANVERTRAUT
ALLE RECHTE VORBEHALTEN

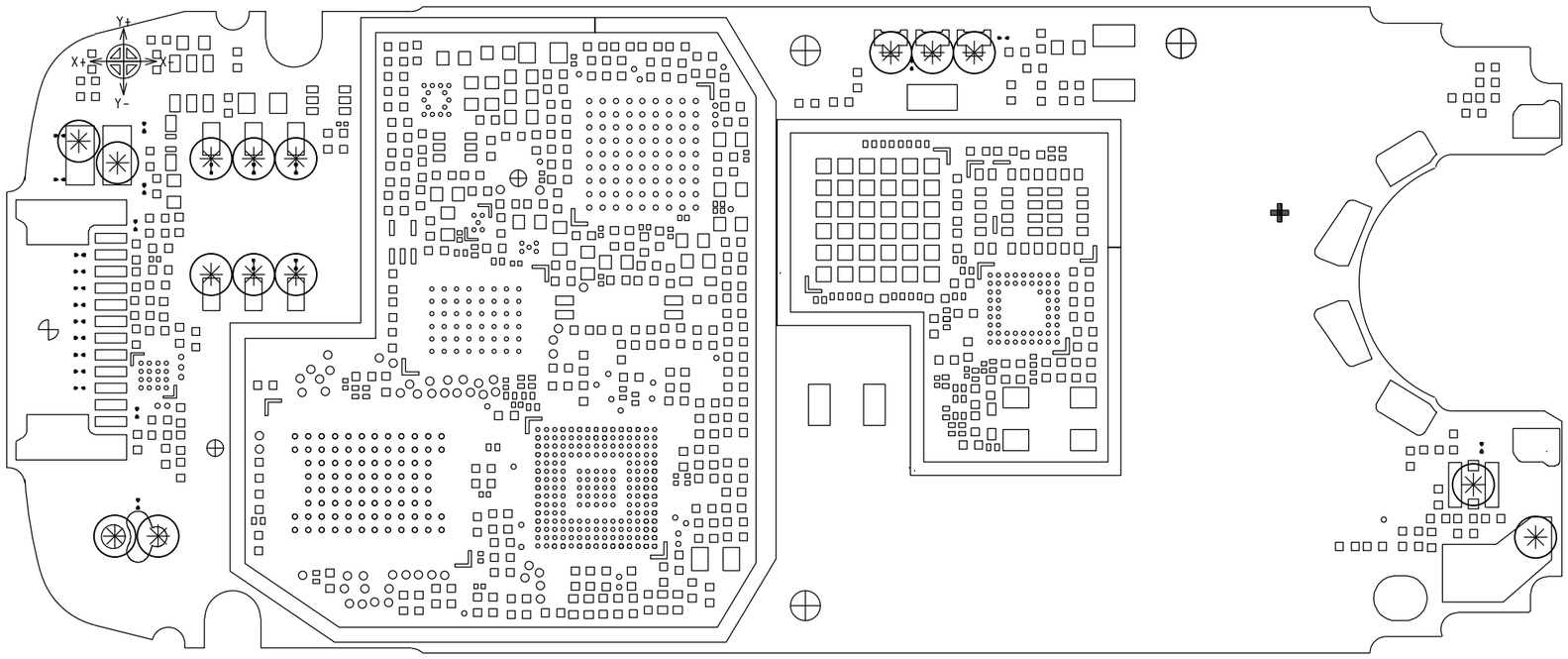

				DATE	18.04.2005	Dorado B6E B2 Variant INT'L 64M_AMD leaded (V21) TESTPOINT DIAGRAMM (SIDE 2)	3:1
				NAME	Chenh		
				APPR'D			
				STD			
				COM MD PD HW4 BJ			
3	26105	18.04.2005	chenh	SIEMENS AG		145416	SHEET 2-
2	22022	24.03.2005	Chenh				
1	22022	18.03.2005	Chenh				
VERS.	CHANGE NUMBER	DATE	NAME	(Created by BOM number: A5B00900172151-26105)			